Logopak®

Highlights

Series 400

T01

www.Logopak.com

Round and compact design

- Compact base body with 600 m capacity
- Series 400 support all applicators for secondary-labelling with most configurable options

Round and compact design

- Even more robust then before
- Labeller base plate with 0.47” (12 mm) anodized aluminium
- Round shaped design
- Easy and flexible applicator install
- All winding units are 100% electronically controlled - no mechanical clutches anymore
- Logopak designed Multi-Motor-Processor card to steer and control all winding units
- Electronical measurements of label + ribbon diameter for pre-warning of low-material

Print Engine V3 Compatible

- Existing V3 Print Engines are compatible with new series 400
- Approved quick-exchange concept of Logopak Print Engines
- High-grade print image
- 4” and 6” print width available
- 300 dpi standard, optional 203 dpi
- 8” (200 mm) print speed per second

Print Engine V5

- Approved quick-exchange concept of Logopak Print Engines
- Open side material handling
- Simple open and close mechanism
- Manual Print Trigger integrated
- High-grade print image
- Support front- and back-feed
- 4” and 6” print width available
- 300 dpi standard, optional 203 dpi
- 8” (200 mm) print speed per second

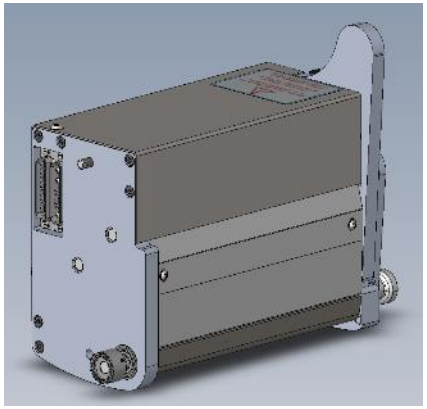

Easy Handling

- Simplified handling of labels and ribbon by minimizing rollers
- Open main drive for easier change of label material
- Label winding direction inside and outside
- Control of material tearing of labels or ribbon
- Pre-warning for low label

Improved label transport

- Dancer arm with special brake function for constant material tension
- Universal clamp for label roll – not latches, no expandable cores
- Label and ribbon capacity of 800 m
- Support inside and outside wound labels
- Label width 1,4“ to 6.5“ (35 - 165 mm)

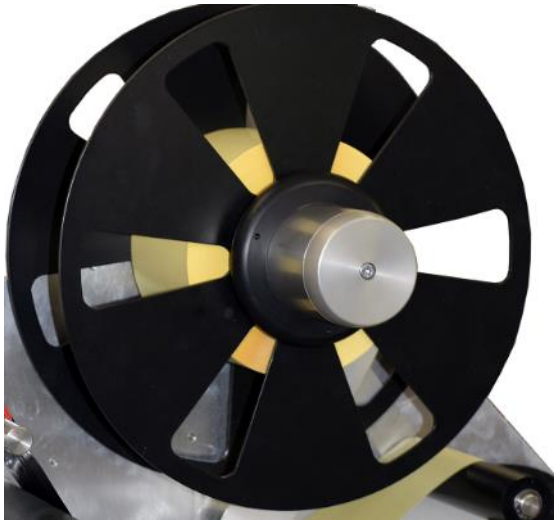

Improved backing paper rewinder

- Open main drive for easy access according safety regulation
- Fail save universal clamp for backing-paper winding unit
- Vulcanized main drive roller which is 920 quality
- Constant tension at either empty or full roll

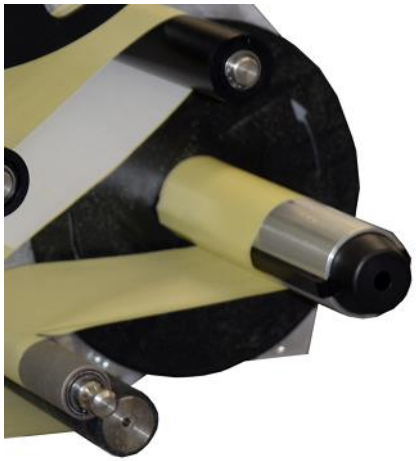

Improved ribbon transport

- Open main drive for easy access according safety regulation
- Notch-free ribbon clamping
- Vulcanized ribbon drive roller which is 920 quality

Service Friendly

- Easy installation
- Simple architecture of mechanical and electronic level
- Less electronic components inside
- One CAN I/O module and one MMP Card (Multi-Motor-Processor)
- Multi-piece cover can be taken of in parts
- All components accessible from the rear side

Applicator Support – Series 400

Logopak®

Power LEAP

Individual configurable applicators – for details refer to datasheet.

B90-applicator	FM-applicator	TE-applicator
DB-applicator	M-applicator	TG-applicator
ET-applicator	M90-applicator	TK-applicator
ETD-applicator	QTB-applicator	TBH-applicator
ETDE-applicator	R-applicator	TVMH-applicator
ETE-applicator	T-applicator	TVM90H-applicator
ETVM90-applicator	TB-applicator	TVM-applicator
F-applicator	TB-HighSpeed	TVM90-applicator
F90-applicator	TBZ-applicator	VM-applicator
FD-applicator	TD-applicator	VM90-applicator

Not yet available!

Features Overview

Logopak®

- Series 400 T01 compared to Series 400 III

Feature	400 T01	400 III
Print Engine V5	**Open**, easy side threading	Closed
Main Drive	**Open**, easy side threading	Closed
Main Drive Concept	Front-feed and main-drive	Main-drive
Label Capacity	**600** m	400 m
Label Width	**165** mm	156 mm
Label Wound Direction	Inside / Outside	Inside Outside require mechanical + electrical changes
Labels pre-warning by parameter	**Yes**	No
Core clamp	Easy, fail save	Complex
Backing Paper Rewind	Easy, fail save	Complex, not fail save
Mechanical Clutches	No	Yes
Motors electronical driven + controlled	**Yes**	No, except label unwinder
Material Track Adjustment	Adjustable	Only with additional disks
Compensation track change 203/300dpi	Yes	Only with additional disks